PART# BV1-2025

BlendMount® Innovative Mounting Solutions

Valentine One RADAR LOCATOR

LEFT HAND DRIVE VEHICLE

INSTALLATION INSTRUCTIONS FOR VALENTINE ONE RADAR DETECTORS

Your rear view mirror has minimal clearance between the back side of the mirror and the mirror stem. It is very important that this mount is installed correctly to ensure mirror adjustability is retained.
PLEASE READ THESE INSTRUCTIONS THOROUGHLY BEFORE INSTALLING THIS MOUNT

NOTE: For illustration purposes, the mount and rear view mirror shown in these instructions may look slightly different then YOUR mount and rear view mirror.

STEP 1 - Remove the two suction cups that are on your existing V1 windshield mount. The two holes that were used to secure the suction cups are now used to attach the BlendMount.

STEP 2 - Remove the lock washer and nut from the button head screws and place the BlendMount assembly onto the V1 windshield mount. Re-attach the lock washer and nut and tighten with the supplied allen wrench.

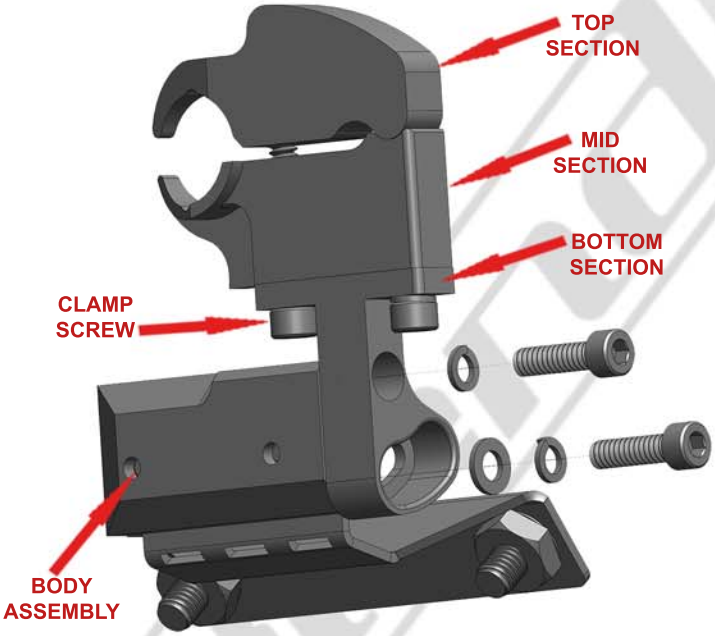

STEP 3 - The BODY ASSEMBLY must be removed to gain access to the CLAMP SCREW. Remove the two socket head screws as shown above. Be sure to remove the lock washer with the top screw along with the lock washer and flat washer with the bottom screw.

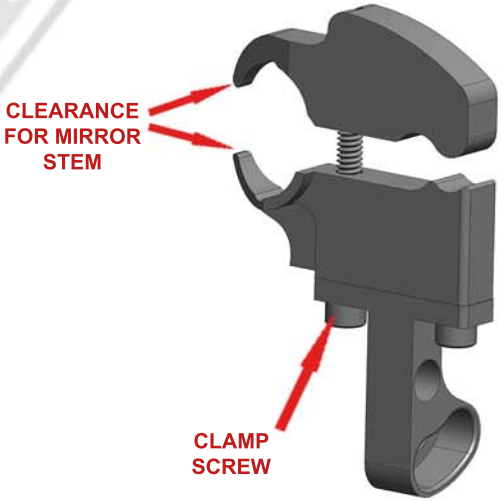

STEP 4 - Loosen the CLAMP SCREW so there is enough clearance between the TOP and MID SECTIONS to slide over the mirror stem.

BlendMount®
Innovative Mounting Solutions

Valentine One RADAR LOCATOR

STEP 5 - While sitting in the passenger seat, place the mount over the mirror stem. Tighten the CLAMP SCREW until the mount starts to clamp onto the mirror stem. Position the mount as far forward as it will go and paralell to the bottom of the mirror before fully tightening.

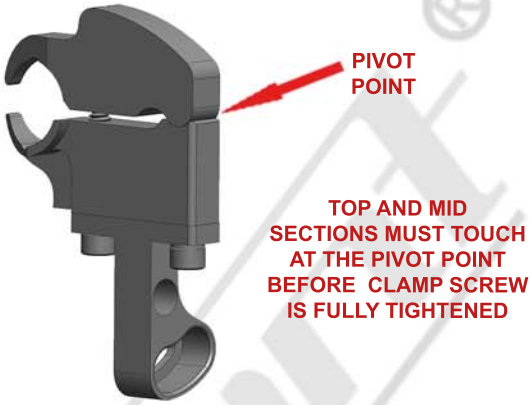

STEP 6 - MAKE SURE THE TOP AND MID SECTIONS ARE TOUCHING AT THE PIVOT POINT. If you can not get them to touch at the pivot point, you have an **incompatible mirror type for this mount.**

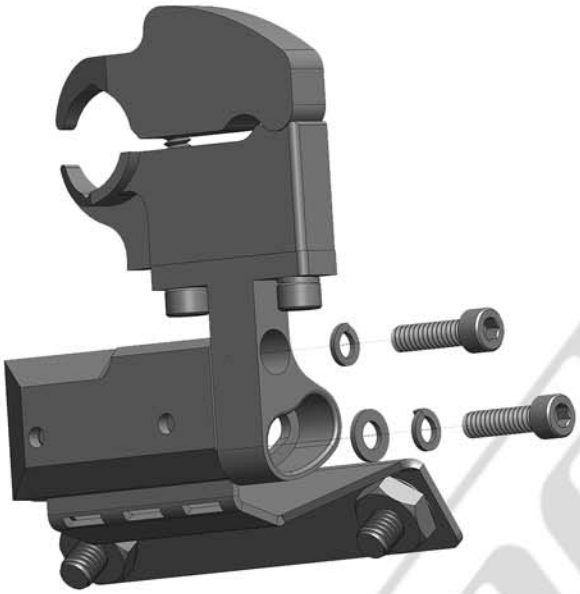

STEP 7 - Reinstall the BODY ASSEMBLY. Be sure to include the lock washer with the top socket head screw and the lock and flat washer with the bottom socket head screw as shown above. NOTE: there are extra lock and flat washers included in the tool kit just in case you happen to misplace one.

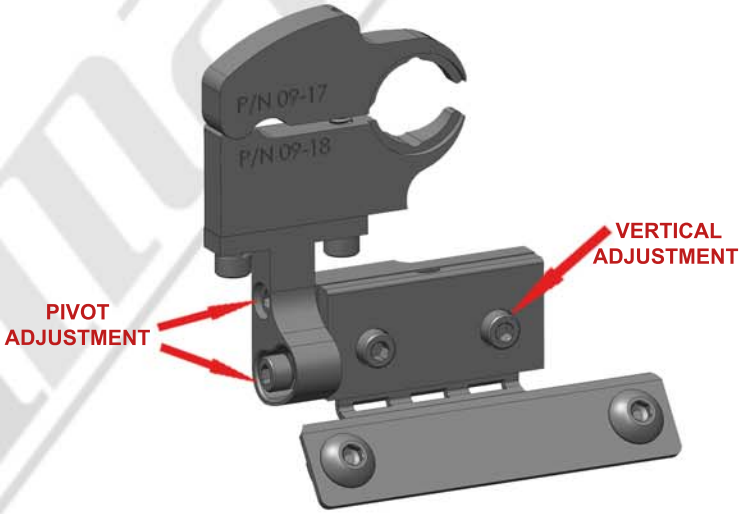

STEP 8 - Install your radar detector onto the mount. Use the adjustments shown above to adjust the RD to your desired position. We recommend adjusting the RD as close to the bottom of your mirror as you can. Be sure to tighten all adjustment screws after the adjustments are made.

CAUTION

DO NOT use this mount if it interferes with the adjustability or the operation of your rear view mirror in any way.
DO NOT use this mount if the radar detector creates an unsafe viewing obstruction.
DO NOT ATTEMPT TO MODIFY THIS PRODUCT. Consult the manufacturer for assistance.
All BlendMount products are accompanied with detailed installation instructions and adjustment tips. You are encouraged to contact customerservice@blendmount.com or call J28 Design at 1-888-497-8388 for further assistance.

Check the BlendMount Forum for installation tips and some vehicle specific installs.
www.blendmount.com

Your feedback is very important to us. Please email any questions or comments you have to **customerservice@blendmount.com**

J28 DESIGN *Innovative Design And Precision Manufacturing*

BlendMount - US PATENT # D625,580 S, D656,811 S, D653,980 S and other patents pending